AC/DC INDUCTIVE PROXIMITY SWITCH SQUARE TYPE

Q 14	Q 42	Q25
●	●	●
10 mm	20 mm	10 mm
PBT RESIN	PBT RESIN	PBT RESIN
●	●	●
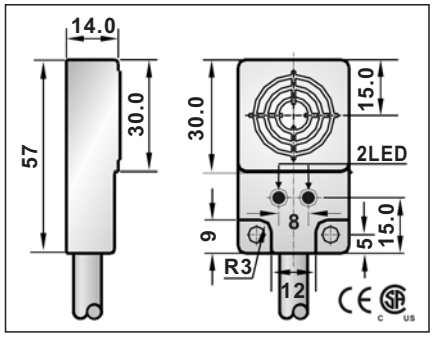	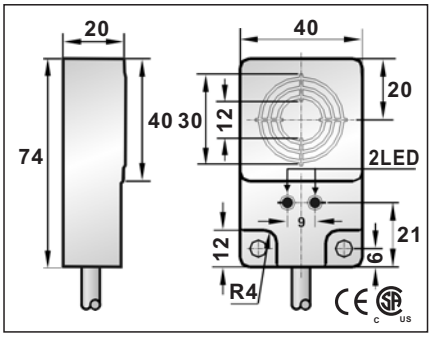	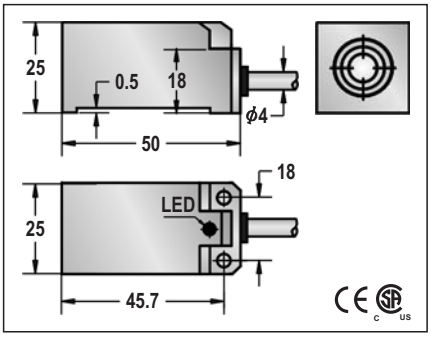
20-250 VAC, 50-60 Hz; 20-250 VDC	20-250 VAC, 50-60 Hz; 20-250 VDC	20-250 VAC, 50-60 Hz; 20-250 VDC
DC RIPPLE <10%	DC RIPPLE <10%	DC RIPPLE <10%
<2.5mA	<2.5mA	<2.5mA
200mA	200mA	200mA
<2.5mA	<2.5mA	<2.5mA
2.2A for 20ms	2.2A for 20ms	2.2A for 20ms
5mA	5mA	5mA
<=10 VAC :<=8 VDC	<=10 VAC :<=8 VDC	<=10 VAC :<=8 VDC
25HZ AC; 40 Hz DC	25HZ AC; 40 Hz DC	25HZ AC; 40 Hz DC
10ms/10ms	10ms/10ms	10ms/10ms
<15% (Sr)	<15% (Sr)	<15% (Sr)
<1.0% (Sr)	<1.0% (Sr)	<1.0% (Sr)
IP67	IP67	IP67
-25 °C - +70°C	-25 °C - +70°C	-25°C - +70°C
<10% (Sr)	<10% (Sr)	<10% (Sr)
YES	YES	YES
-	-	-
-	-	-
RFI>3V/m / EFT>1KV / ESD>4KV (contact)	RFI>3V/m / EFT>1KV / ESD>4KV (contact)	RFI>3V/m / EFT>1KV / ESD>4KV (contact)
IEC 60947-5-2,Part 7.4.1 / IEC 60947-5-2,Part 7.4.2	IEC 60947-5-2,Part 7.4.1 / IEC 60947-5-2,Part 7.4.2	IEC 60947-5-2,Part 7.4.1 / IEC 60947-5-2,Part 7.4.2
PBT	PBT	PBT
~~FQP1-1410U-A2L2T~~ 9	~~FQP1-2020U-A2L2T~~ 9	~~FQP1-2510U-A2L2F~~ 9
~~FQP1-1410U-B2L2T~~ 10	~~FQP1-2020U-B2L2T~~ 10	~~FQP1-2510U-B2L2F~~ 10
4φ2x0.34	4φ2x0.34	4 φ2x0.34
Approx.110 g	Approx.130 g	Approx.120 g

Note:
In Preparation: Part numbers with a line through the middle

AC/DC INDUCTIVE PROXIMITY SWITCH SQUARE TYPE

Q25	Q30		Q30	
●	●	○	●	○
10 mm	10 mm	15 mm	10 mm	15 mm
PBT RESIN	PBT RESIN		PBT RESIN	
●	●		●	
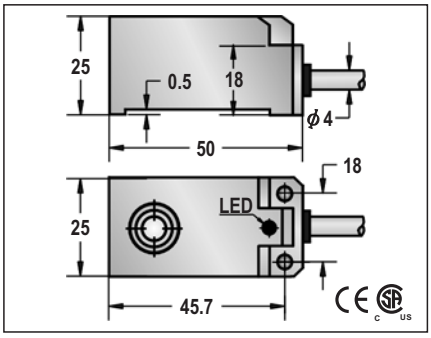	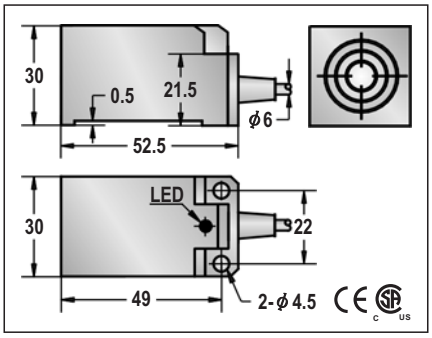		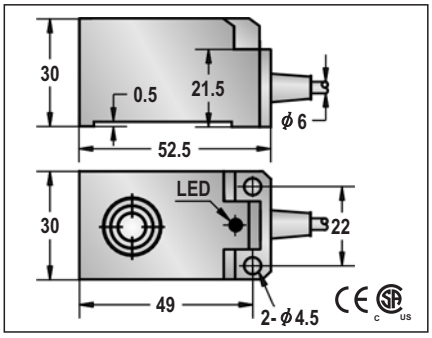	
20-250 VAC, 50-60 Hz; 20-250 VDC	20-250 VAC, 50-60 Hz; 20-250 VDC		20-250 VAC, 50-60 Hz; 20-250 VDC	
DC RIPPLE <10%	DC RIPPLE <10%		DC RIPPLE <10%	
<2.5mA	<2.5mA		<2.5mA	
200mA	200mA		200mA	
<2.5mA	<2.5mA		<2.5mA	
2.2A for 20ms	2.2A for 20ms		2.2A for 20ms	
5mA	5mA		5mA	
<=10 VAC :<=8 VDC	<=10 VAC :<=8 VDC		<=10 VAC :<=8 VDC	
25HZ AC; 40 Hz DC	25HZ AC; 40 Hz DC		25HZ AC; 40 Hz DC	
10ms/10ms	10ms/10ms		10ms/10ms	
<15% (Sr)	<15% (Sr)		<15% (Sr)	
<1.0% (Sr)	<1.0% (Sr)		<1.0% (Sr)	
IP67	IP67		IP67	
-25 °C - +70°C	-25°C - +70°C		-25 °C - +70°C	
<10% (Sr)	<10% (Sr)		<10% (Sr)	
YES	YES		YES	
-	-		-	
-	-		-	
RFI>3V/m / EFT>1KV / ESD>4KV (contact)	RFI>3V/m / EFT>1KV / ESD>4KV (contact)		RFI>3V/m / EFT>1KV / ESD>4KV (contact)	
IEC 60947-5-2,Part 7.4.1 / IEC 60947-5-2,Part 7.4.2	IEC 60947-5-2,Part 7.4.1 / IEC 60947-5-2,Part 7.4.2		IEC 60947-5-2,Part 7.4.1 / IEC 60947-5-2,Part 7.4.2	
PBT	PBT		PBT	
~~FQP1-2510U-A2L2T~~	9	~~FQP1-3010U-A2L2F~~	9	~~FQP2-3015U-A2L2F~~	~~FQP1-3010U-A2L2T~~	9	~~FQP2-3015U-A2L2T~~
~~FQP1-2510U-B2L2T~~	10	~~FQP1-3010U-B2L2F~~	10	~~FQP2-3015U-B2L2F~~	~~FQP1-3010U-B2L2T~~	10	~~FQP2-3015U-B2L2T~~
4 ϕ 2x0.34	5.8 ϕ 2x0.5		5.8 ϕ 2x0.5	
Approx.120 g	Approx.155 g		Approx.155 g	

Note:

In Preparation: Part numbers with a line through the middle

AC/DC INDUCTIVE PROXIMITY SWITCH SQUARE TYPE

Q40		
●	○	
15 mm	30 mm	
PBT RESIN		
●		
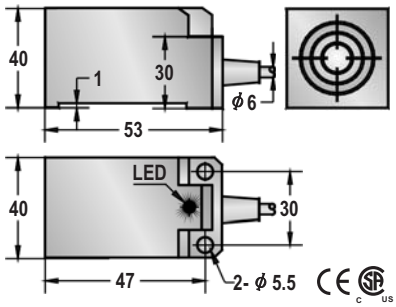		
20-250 VAC, 50-60 Hz; 20-250 VDC		
DC RIPPLE <10%		
<2.5mA		
200mA		
<2.5mA		
2.2A for 20ms		
5mA		
<=10 VAC :<=8 VDC		
25HZ AC; 40 Hz DC		
10ms/10ms		
<15% (Sr)		
<1.0% (Sr)		
IP67		
-25°C - +70°C		
<10% (Sr)		
YES		
-		
-		
RFI>3V/m / EFT>1KV / ESD>4KV (contact)		
IEC 60947-5-2,Part 7.4.1 / IEC 60947-5-2,Part 7.4.2		
PBT		
~~FQP1-4515U-A2L2F~~	9	~~FQP2-4530U-A2L2F~~
~~FQP1-4515U-B2L2F~~	10	~~FQP2-4530U-B2L2F~~
5.8φ2x0.5		
Approx.190 g		

Q40		
●	○	
15 mm	30 mm	
PBT RESIN		
●		
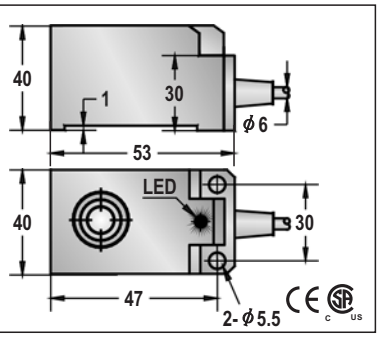		
20-250 VAC, 50-60 Hz; 20-250 VDC		
DC RIPPLE <10%		
<2.5mA		
200mA		
<2.5mA		
2.2A for 20ms		
5mA		
<=10 VAC :<=8 VDC		
25HZ AC; 40 Hz DC		
10ms/10ms		
<15% (Sr)		
<1.0% (Sr)		
IP67		
-25°C - +70°C		
<10% (Sr)		
YES		
-		
-		
RFI>3V/m / EFT>1KV / ESD>4KV (contact)		
IEC 60947-5-2,Part 7.4.1 / IEC 60947-5-2,Part 7.4.2		
PBT		
~~FQP1-4515U-A2L2T~~	9	~~FQP2-4530U-A2L2T~~
~~FQP1-4515U-B2L2T~~	10	~~FQP2-4530U-B2L2T~~
5.8φ3x0.5		
Approx.190 g		

Q30x45x12		
●	○	
10 mm	15 mm	
PBT RESIN		
●		
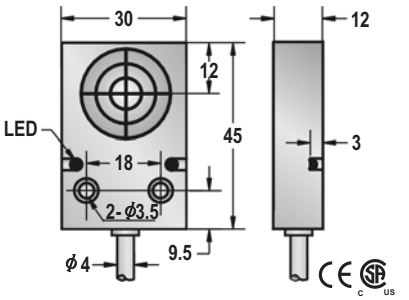		
20-250 VAC, 50-60 Hz; 20-250 VDC		
DC RIPPLE <10%		
<2.5mA		
200mA		
<2.5mA		
2.2A for 20ms		
5mA		
<=10 VAC :<=8 VDC		
25HZ AC; 40 Hz DC		
10ms/10ms		
<15% (Sr)		
<1.0% (Sr)		
IP67		
-25°C - +70°C		
<10% (Sr)		
YES		
-		
-		
RFI>3V/m / EFT>1KV / ESD>4KV (contact)		
IEC 60947-5-2,Part 7.4.1 / IEC 60947-5-2,Part 7.4.2		
PBT		
FQP1-3110U-A2L2T	9	FQP2-3115U-A2L2T
FQP1-3110U-B2L2T	10	FQP2-3115U-B2L2T
4φ2x0.34		
Approx.100 g		

Note:
Coming Soon : Part numbers with underline
In Preparation: Part numbers with a line through the middle

Q30x50x7、Q40x50x17、Q35x55x15

AC/DC INDUCTIVE PROXIMITY SWITCH SQUARE TYPE

Q30x50x7		Q40x50x17		Q35x55x15	
●	○	●	○	●	○
10 mm	15 mm	15 mm	30 mm	10 mm	15 mm
PBT RESIN		PBT RESIN		PBT RESIN	
●		●		●	

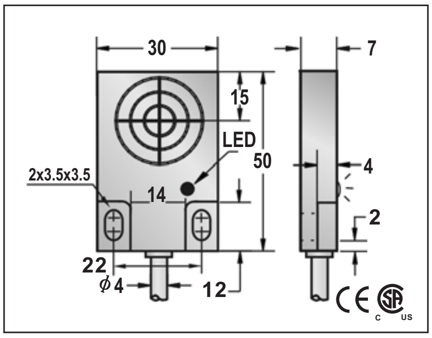

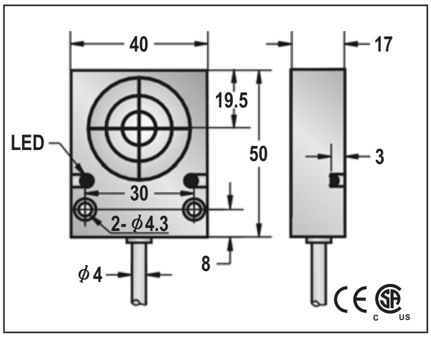

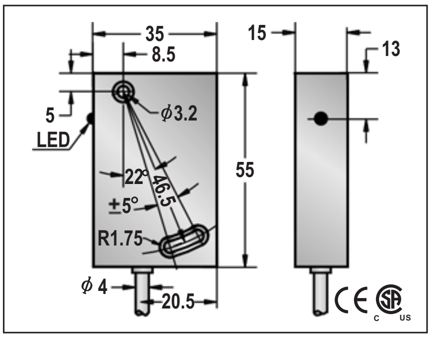

Q30x50x7	Q40x50x17	Q35x55x15
20-250 VAC, 50-60 Hz; 20-250 VDC	20-250 VAC, 50-60 Hz; 20-250 VDC	20-250 VAC, 50-60 Hz; 20-250 VDC
DC RIPPLE <10%	DC RIPPLE <10%	DC RIPPLE <10%
<2.5mA	<2.5mA	<2.5mA
200mA	200mA	200mA
<2.5mA	<2.5mA	<2.5mA
2.2A for 20ms	2.2A for 20ms	2.2A for 20ms
5mA	5mA	5mA
<=10 VAC :<=8 VDC	<=10 VAC :<=8 VDC	<=10 VAC :<=8 VDC
25HZ AC; 40 Hz DC	25HZ AC; 40 Hz DC	25HZ AC; 40 Hz DC
10ms/10ms	10ms/10ms	10ms/10ms
<15% (Sr)	<15% (Sr)	<15% (Sr)
<1.0% (Sr)	<1.0% (Sr)	<1.0% (Sr)
IP67	IP67	IP67
-25 °C - +70 °C	-25 °C - +70 °C	-25 °C - +70 °C
<10% (Sr)	<10% (Sr)	<10% (Sr)
YES	YES	YES
-	-	-
-	-	-
RFI>3V/m / EFT>1KV / ESD>4KV (contact)	RFI>3V/m / EFT>1KV / ESD>4KV (contact)	RFI>3V/m / EFT>1KV / ESD>4KV (contact)
IEC 60947-5-2,Part 7.4.1 / IEC 60947-5-2,Part 7.4.2	IEC 60947-5-2,Part 7.4.1 / IEC 60947-5-2,Part 7.4.2	IEC 60947-5-2,Part 7.4.1 / IEC 60947-5-2,Part 7.4.2
PBT	PBT	PBT

Q30x50x7			Q40x50x17			Q35x55x15		
FQP1-3110U-A2S2T	9	FQP2-3115U-A2S2T	~~FQP1-4115U-A2L2T~~	9	~~FQP2-4130U-A2L2T~~	~~FQP1-3510U-A2L2T~~	9	~~FQP2-3515U-A2L2T~~
FQP1-3110U-B2S2T	10	FQP2-3115U-B2S2T	~~FQP1-4115U-B2L2T~~	10	~~FQP2-4130U-B2L2T~~	~~FQP1-3510U-B2L2T~~	10	~~FQP2-3515U-B2L2T~~

Q35x55x15:

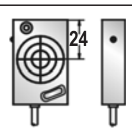

sensing face.

Q30x50x7	Q40x50x17	Q35x55x15
4ϕ2x0.34	4ϕ2x0.34	4ϕ2x0.34
Approx.100 g	Approx.120 g	Approx.110 g

Note:

Coming Soon : Part numbers with underline
In Preparation: Part numbers with a line through the middle

AC/DC INDUCTIVE PROXIMITY SWITCH SQUARE TYPE

Q80	
●	○
40 mm	50 mm
PBT RESIN	
●	

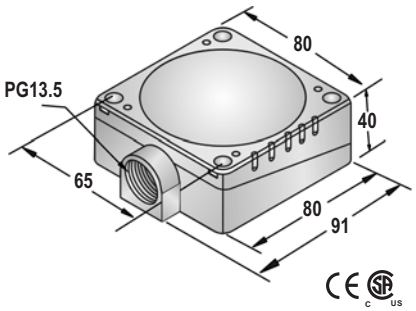

20-250 VAC, 50-60 Hz; 20-250 VDC
DC RIPPLE <10%
<2.5mA
200mA
<2.5mA
2.2A for 20ms
5mA
<=10 VAC :<=8 VDC
25HZ AC; 40 Hz DC
10ms/10ms
<15% (Sr)
<1.0% (Sr)
IP67
-25°C - +70°C
<10% (Sr)
YES
-
-
RFI>3V/m / EFT>1KV / ESD>4KV (contact)
IEC 60947-5-2,Part 7.4.1 / IEC 60947-5-2,Part 7.4.2
PBT

FQP1-8040U-A2LT	9	FQP2-8050U-A2LT
FQP1-8040U-B2LT	10	FQP2-8050U-B2LT

Approx.110 g